www.bj-gear.com

bj·gear

Stainless steel actuator

IP-classification IP69K

Customisation is our standard

Customisation is our standard

BJ-Gear A/S is a leading company within developing, manufacturing and assembling of gearboxes, actuators, worm gear screw jacks, brakes and electromechanical cylinders.

We produce a wide range of standard gearboxes and actuators and supply motors, encoders, electromagnetic brakes and couplings etc. of recognised manufactures, making it possible to supply complete transmissionsolutions at short notice.

The flexible production machinery, along with our modular designed product range, allow very short and precise delivery times.

BJ-Gear A/S supplies reliable transmission solutions for industries such as healthcare, food processing and packaging, aerospace and defense, offshore and marine, the energy and environment sector and to many other business areas.

The combination of innovation, know-how, high-technological production facilities and our focus on customer requirements make us a competent partner.

Stainless steel actuators based on a worm gear drive

Stainless steel actuators from BJ-Gear are very sturdy in terms of overload and operating environment. The design is compact, simple and its modular construction allows great flexibility. The modular design is also ideal if customisations are needed.

If higher speed and loads are needed, we have extensive experience in adapting or designing special solutions.

We are certified according to EN ISO 9001 and EN ISO 14001.

Furthermore, the stainless steel actuator is IP69K classified which insures that the product can be cleaned with water under pressure from all directions.

Actuator in stainless steel

with trapezoidal spindle

IP-classification IP69K

The protection of the stainless steel actuator is IP69K which ensures that the product can be cleaned with water under pressure from all directions. To be more accurate the actuator is to be sprayed with water from angles of 0°, 30°, 60° and 90° with an interval of 30 seconds in every position and at a distance of 10-15 cm.

The water must be at least 80° C and the water pressure must be 14-16 litres per minute. Furthermore, the product is placed on a turntable that rotates 5 rpm. This degree of protection can only be achieved with an equivalent high degree of protection against dust which results in the designation of IP69K. This approval is especially used in the food industry.

An electrical actuator is primarily used where an intermittent axial movement and positioning is needed. It is a good alternative to hydraulic and pneumatic cylinders due to the simple connection to electrical operational systems and to the hygienic benefits. Furthermore, you will achieve a steady speed all over the load range compared to hydraulics and pneumatics solutions. The dynamic tensile/compression force is up to 29,4 kN of standard products. Higher force can be achieved by customised solutions.

Actuators with trapezoidal spindle
This type of actuator is simple and of a sturdy construction. It is based on our worm gearboxes on which a set of cylindrical stainless steel tubes and an inner threaded spindle are mounted. Using a ball screw it is possible to achieve linear movements of up to approx. 6,500 mm/min. on standard products. Higher speed can be achieved by customised solutions.

Limit sensors Balluff switching type

Data for limit sensors Balluff switching type, normally open (NO) or normally closed (NC)	
Approvals / Confomity	CE / cULus
Enclosure type per IEC 60529	IP67
Assured switching field strength	2 [kA/m]
Connection type	Cable
Effective operation current Ie	200 [mA]
Effective operating voltage Ue DC	24 [V]
Electrical version	DC, direct current
Load capacitance max. (at Ue)	1 [µF]
No-load current Io damped max.	15 [mA]
Max. no-load cur. Io undamped	10 [mA]
Operating voltage UB max DC	30 [V]
Operating voltage UB min DC	10 [V]
Rated insulation voltage Ui	75 [DC]
Rated short circuit current	100 [A]
Rated switching field strength	1,2 [kA/m]
Ripple max (% of Ue)	15
Turn-on delay ton max.	0,05 [ms]
Voltage drop static max.	3,1 [V]
Ambient temperature Ta max.	85°C
Ambient temperature Ta max.	-25°C
Housing material	LCP
Number of conductors	3
The sensor is functional again after the overload has been eliminated	

Duty cycle

Duty cycle, also referred to as DC, is the ratio of on-time to off-time, expressed as a percentage. The purpose of duty cycle guideline is to prevent overheating of the actuator, with the risk of premature wear as consequence.

$$DC = \frac{on_{time}}{on_{time} + off_{time}} * 100\%$$

Eq. 1: Calculation of duty cycle

$$off_{time} = on_{time} \left(\frac{100}{\%DC} - 1\right) * 100\%$$

Eq. 2: Calculation of off-time

Duty cycle guidelines

- Catalogue duty cycle values is based on uniform load in both directions.
- Ambient temperature is 23°C.
- Continuous operation of actuator at the duty cycle limit, will result in overheating of actuator. E.g., if DC=20% is required in continuous operation, it is recommended to use a configuration with a DC=25%.
- Temperature measured at the bottom of the inner tube (can be measured when fully extended) shall not exceed 60°C.

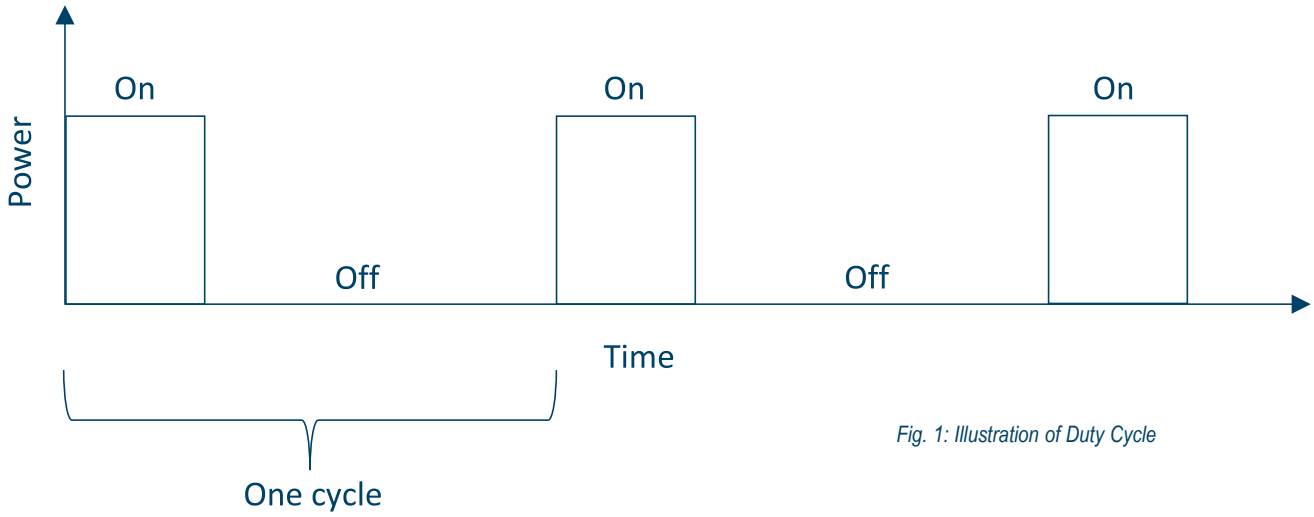

Fig. 1: Illustration of Duty Cycle

Actuators guidelines

- Axial loading of actuator only.
- Avoid shock loads.

Drawings size 42

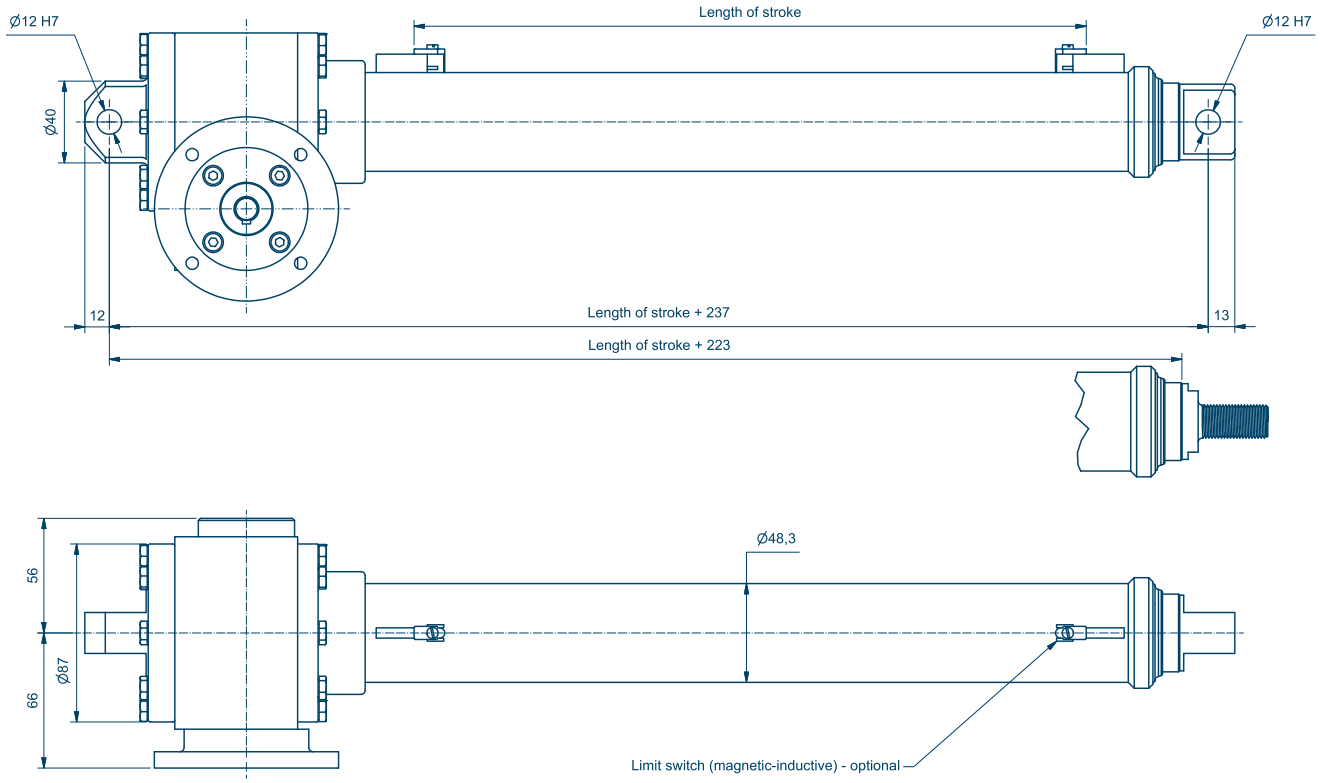

To avoid damage to actuator - do not exceed the specified range of motion!

Table of effect

Size 42

for stainless steel actuators with trapezoidal spindle

Motor		Max. load [N] / DC [%]										
	Ratio	5,4	7,5	10	15	20	25	30	40	50	62	75
700	v [mm/min]	648	467	350	233	175	140	117	88	70	56	47
	0,12 kW**	2910/34	3770/38	4370/43	5690/43	6880/59	8140/66	8580/72	9640/86	10360/86	11210/86	12310/87
	0,18 kW**	4470/22	5800/26	6730/27	8780/27	10480/35	12400/35	13100/35				
	0,25 kW**	6290/17	8430/17	9470/20	12200/20							
	0,37 kW**	9300/12										
900	v [mm/min]	833	600	450	300	225	180	150	113	90	73	60
	0,12 kW**	2330/32	2970/36	3690/40	4940/47	5430/55	6600/68	7190/80	8090/86	8960/86	9580/86	10320/86
	0,18 kW	3580/22	4570/25	5680/25	7610/28	8390/34	10200/36	11150/38	12580/40	13720/40	15000*/41	
	0,25 kW	5040/16	6420/18	8260/18	10730/20	11830/22	14370/23					
	0,37 kW	7630/10	9630/11									
1400	v [mm/min]	1296	933	700	467	350	280	233	175	140	113	93
	0,12 kW**	1460/34	1920/38	2290/39	2880/43	3630/52	4300/62	4780/72	5290/88	6250/88	6860/88	7290/88
	0,18 kW	2300/22	2990/24	3520/25	4500/29	5690/32	6650/35	7400/37	8230/38	9570/50	10520/52	11420/54
	0,25 kW	3240/16	4210/17	5020/19	6340/20	8020/24	9370/25	10430/25	11630/28	13550/31	14900*/31	
	0,37 kW	4910/12	6390/13	7530/13	9520/13	12200/14						
	0,55 kW	7390/10										
2800	v [mm/min]	2593	1867	1400	933	700	560	467	350	280	226	187
	0,12 kW	720/34	950/37	1170/41	1640/44	1950/48	2290/52	2620/55	2920/68	3380/75	3810/80	4070/81
	0,18 kW	1140/23	1500/23	1860/26	2560/28	3060/30	3590/32	4120/34	4620/41	5360/45	6050/50	6360/51
	0,25 kW	1650/19	2160/17	2690/18	3650/19	4250/22	5130/23	5890/23	7010/27	7700/30	8550/34	9190/35
	0,37 kW	2530/11	3320/12	4070/13	5620/14	6890/14	7920/15	8990/16	10550/16	11790/17	13110/17	
	0,55 kW	3800/8	5010/9	6200/10	8480/10							
	0,75 kW	5250/5	6920/6									

*Max load: 14,430 | **Only available in aluminium!

Drawings size 52

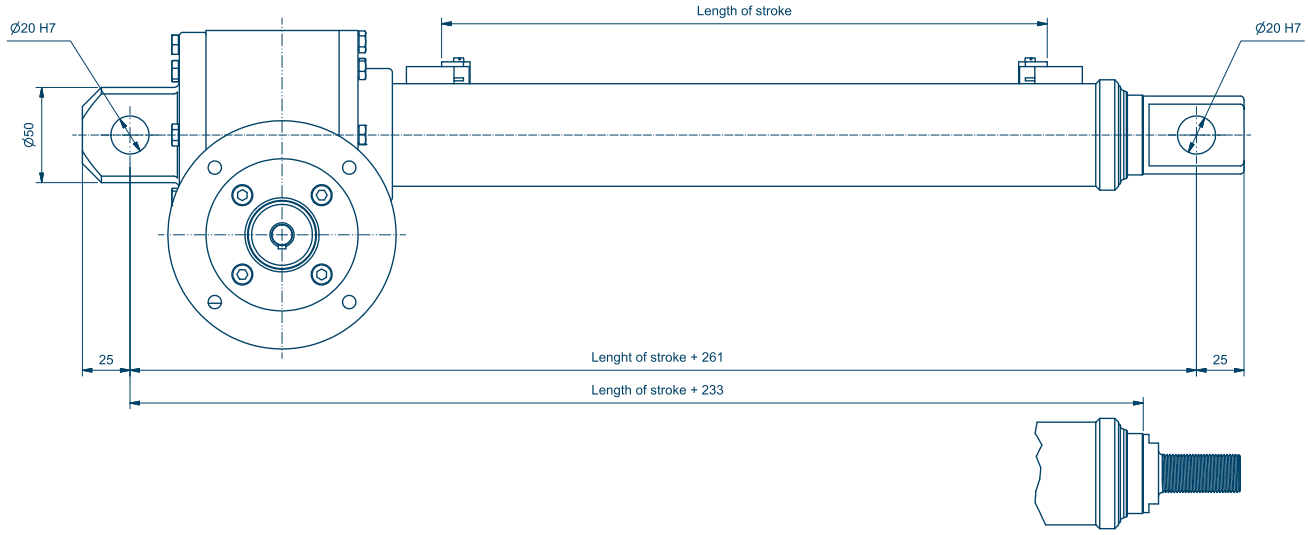

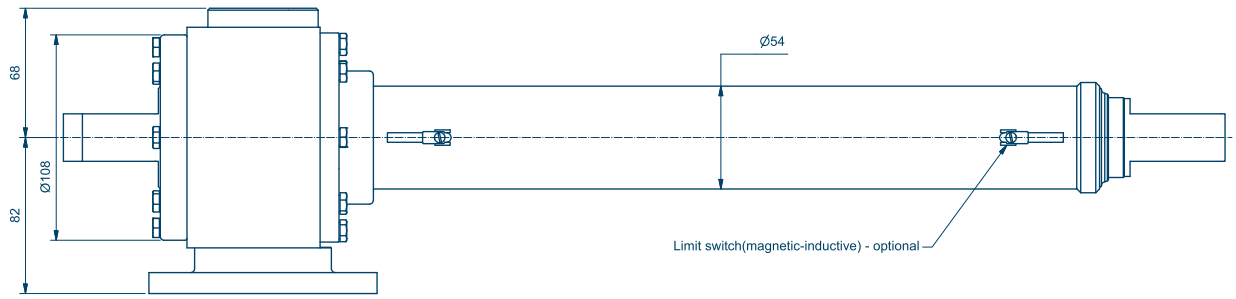

To avoid damage to actuator - do not exceed the specified range of motion!

Table of effect

Size 52

for stainless steel actuators with trapezoidal spindle

Motor		Max. load [N] / DC [%]							
	Ratio	7,5	10	15	19	30	38	51	62
700	v [mm/min]	560	420	280	221	140	111	82	68
	0,12 kW **	2860/38	3590/43	4730/43	5750/59	7270/72	7510/86	8800/86	9080/86
	0,18 kW **	4460/26	5530/27	7300/27	8880/35	11280/35	11680/35	13760/37	13920/40
	0,25 kW **	6360/17	7890/20	10840/20	13600/21	16590/21			
	0,37 kW **	9860/12	12260/13	16260/13					
	0,55 kW **	14830/7							
900	v [mm/min]	720	540	360	284	180	142	106	87
	0,18 kW	3710/36	4610/40	6340/47	7270/55	9290/80	9690/86	11130/86	11900/86
	0,25 kW	5280/25	6570/25	9050/28	10250/34	13320/46	13930/52	15760/58	16870/64
	0,37 kW	8010/18	9980/18	13580/20	15380/22				
	0,55 kW	11910/12	15020/13						
	0,75 kW	16440/7							
1400	v [mm/min]	1120	840	560	442	280	221	165	135
	0,25 kW	3210/38	4170/39	5540/43	6590/52	8430/72	8950/88	10320/88	11070/88
	0,37 kW	4870/24	6340/25	8420/29	10400/32	13380/37	13840/38	16310/50	16710/52
	0,55 kW	7660/17	9540/19	12690/20	15670/24			24680*/25	
	0,75 kW	10570/13	13170/13						
2800	v [mm/min]	2240	1680	1120	884	560	442	329	271
	0,37 kW	2480/17	3130/18	4510/19	5450/22	7270/23	8150/27	9690/30	11140/34
	0,55 kW	3900/12	4980/13	6890/14	8320/14	11950/16	12490/16	14650/18	16850/20
	0,75 kW	5460/9	6880/10	9510/10	11640/10	16540/12			
	1,1 kW	8350/6	10210/7						

*Max load: 20,100 | **Only available in aluminium!

Drawings size 61

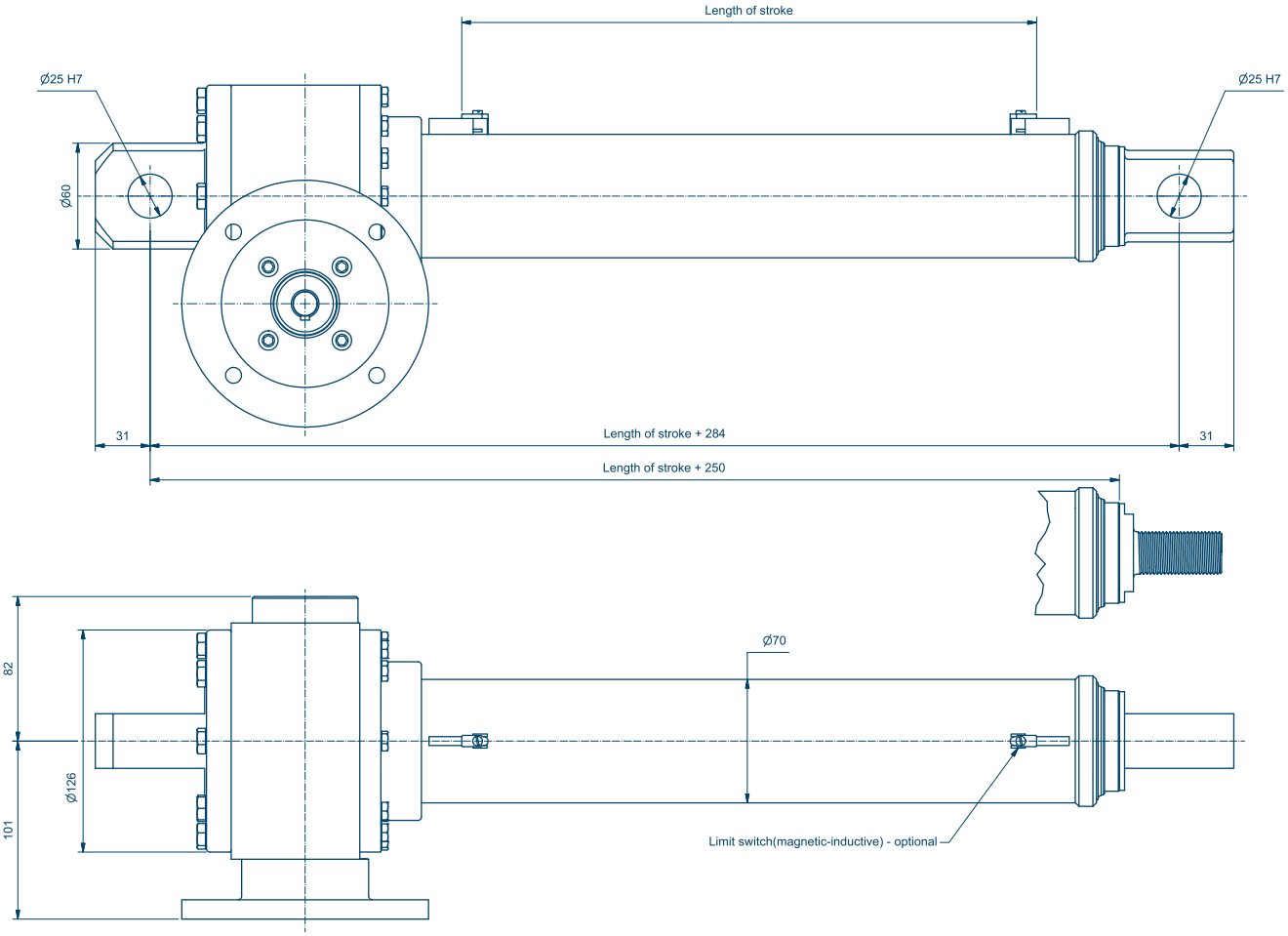

To avoid damage to actuator - do not exceed the specified range of motion!

Table of effect

Size 61

for stainless steel actuators with trapezoidal spindle

Motor		Max. load [N] / DC [%]							
	Ratio	7	10	15	21	30	40	48	60
700	v [mm/min]	700	490	327	233	163	123	102	82
	0,18 kW **	3390/38	4690/43	5930/43	6350/59	9010/72	9880/86	11520/86	12450/86
	0,25 kW **	5070/26	6690/27	8370/27	8950/35	12720/35	13950/35	16300/40	17660/44
	0,37 kW **	7690/17	10020/20	13240/20	13440/19	20030/17	23090/16	25870/15	26680/14
	0,55 kW **	11570/12	15080/13	19690/14	20260/15				
	0,75 kW **	16390/8	20820/9	27190/10	27640/11				
	1,1 kW **	24320/6							
900	v [mm/min]	900	630	420	300	210	158	131	105
	0,25 kW	3680/36	5130/40	6780/47	8040/55	10360/80	11610/86	12360/86	13570/86
	0,37 kW	5520/25	8080/25	10290/28	12600/34	16520/46	18340/52	20590/58	21560/64
	0,55 kW	8720/18	12170/18	16130/20	19000/22	24560/24	27270/26		
	0,75 kW	11890/12	16590/13	22000/14	26270/15				
	1,1 kW	17650/6	24630/8						
	1,5 kW	24070/4							
1400	v [mm/min]	1400	980	653	467	327	245	204	163
	0,25 kW	2330/38	3260/39	4590/43	5170/52	6660/72	7700/88	8510/88	9060/88
	0,37 kW	3670/24	4940/25	6970/29	8210/32	10620/37	12350/38	13690/50	14400/62
	0,55 kW	5600/17	7820/19	10500/20	12380/24	16020/25	18660/26	20700/28	21820/32
	0,75 kW	8000/13	10790/13	15050/13	17110/13	21850/14	25450/15	28230/15	30300*/16
	1,1 kW	11880/9	15830/9	22350/9	25440/9				
	1,5 kW	16200/5	21850/5						
2800	v [mm/min]	2800	1960	1307	933	653	490	408	327
	0,37 kW	1830/17	2530/18	3390/19	4150/22	5860/23	6950/27	7740/30	8120/34
	0,55 kW	2830/12	3990/13	5580/14	6610/14	8960/16	10660/16	11880/18	13100/18
	0,75 kW	3950/9	5580/10	7700/10	9270/10	12880/12	14750/12	16470/14	17870/14
	1,1 kW	5870/6	8290/7	11450/8	13780/10	19160/11	21970/11	24520/12	26650/12
	1,5 kW	8100/5	11440/6	15810/6	18800/7	26130/7			
	2,2 kW	12010/5	16980/5						
	3 kW	16380/4							

*Max load: 29,420 | **Only available in aluminium!

Stroke length

Maximum permissible axial load of trapezoidal spindle (buckling load)

- Values apply for vertical mounted actuators (thrust)
- Do not subject actuator to bending load
- Uncontrolled stops must be avoided, i.e. running against mechanical stop or gear housing must not occur

Standard lenghts of stroke

100 [mm]

200 [mm]

300 [mm]

400 [mm]

500 [mm]

600 [mm]

Other lengths on request

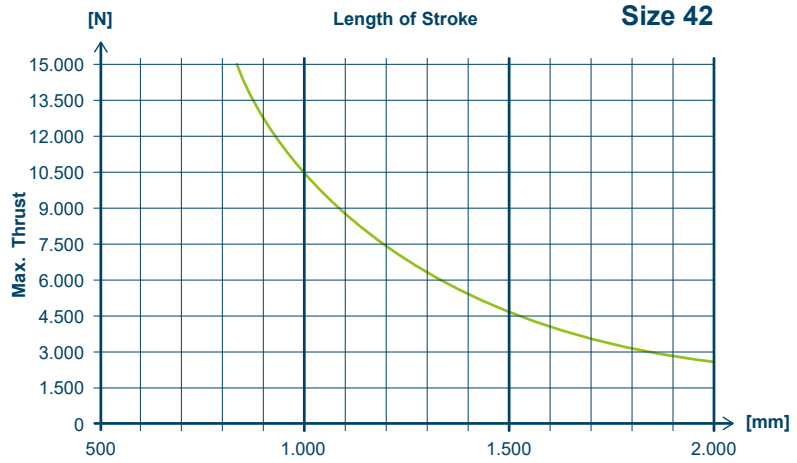

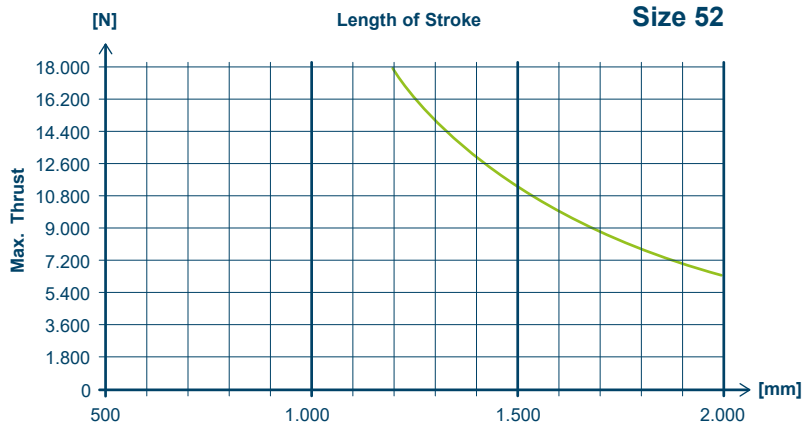

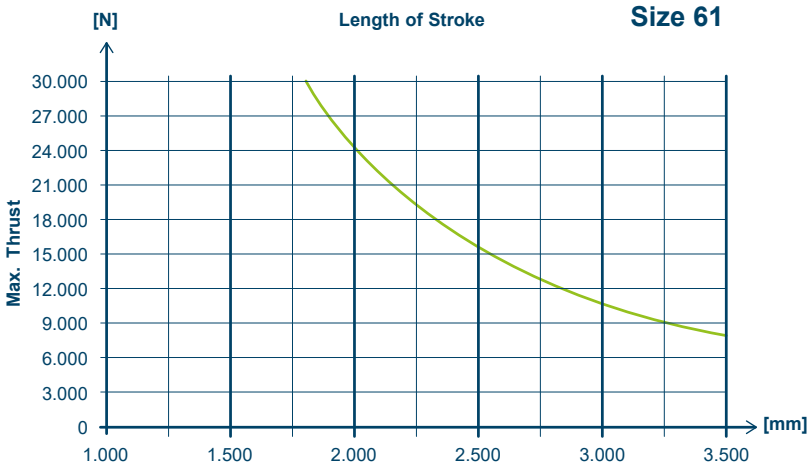

Connections

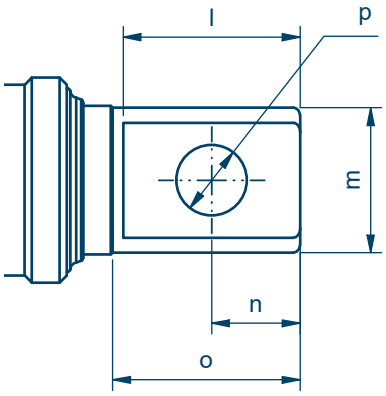

Nipple standard

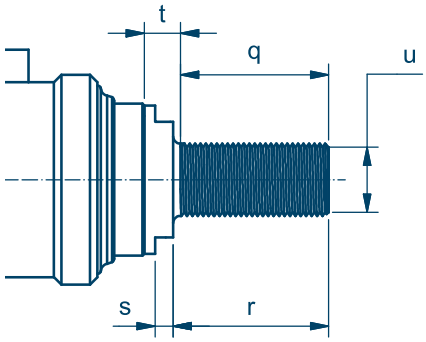

External thread

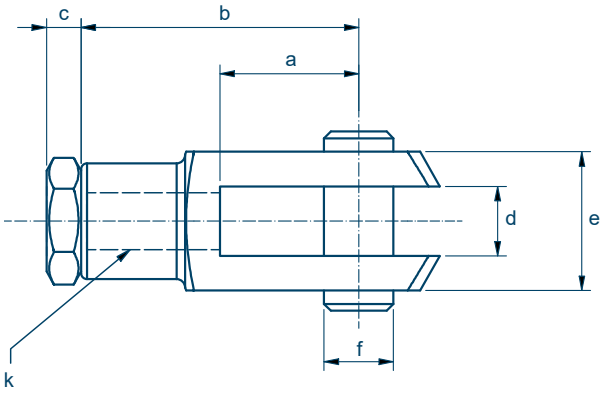

Fork joint

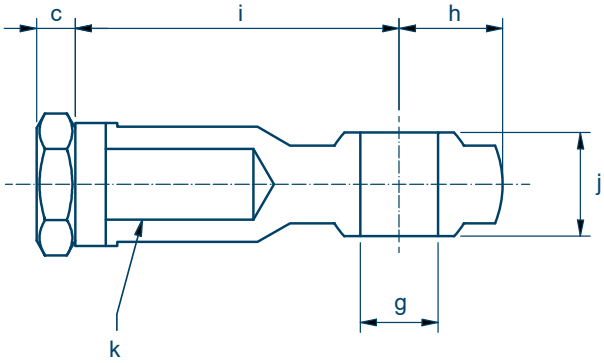

Joint bearing

	Fork joint							Bearing joint						Standard nipple					External thread				
Gear series	a	b	c	d	e	f	k	c	g	h	i	j	k	l	m	n	o	p	q	r	s	t	u
42	32	64	8	16	32	16	M16x1,5	8	16	21	64	21	M16x1,5	25	37	13	27	12	32	34	5	10	M16x1,5
52	40	80	10	20	40	20	M20x1,5	10	20	25	77	25	M20x1,5	50	41	25	53	20	41	43	5	10	M20x1,5
61	50	100	12	25	50	25	M24x2	12	25	31	94	31	M24x2	62	56	31	65	25	48	50	5	10	M24x2

Stainless steel products

BJ-Gear A/S manufactures a wide range of stainless steel gearboxes, actuators and worm gear screw jacks. The stainless steel products are developed specifically for the food industry and industries where the requirements for material resistance and an easy-to-clean design are continuously stringent. The gearboxes are life lubricated and can be supplied with lubricants approved for the food industry. The products of stainless steel can be customised according to your needs.

Worm gearboxes

Features and advantages

- Hygienic design
- Sturdy and reliable
- Compact design
- High quality
- Can be equipped with stainless AC motors, servo motors, encoders & brakes
- High efficiency or self locking
- Custom design

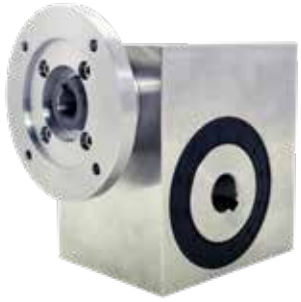

Premium stainless steel worm gearbox

Standard stainless steel worm gearbox

Stainless worm gearbox with a special motor flange for DC motor and a stainless motor shiel

Integrated stainless steel worm gearbox with enhanced bearings and special output shaft

Standard stainless steel worm gearbox

Helical and helical bevel gearboxes

The helical bevel gearboxes are characterised by high power density and an efficiency of up to 96%. The compact and modular design makes the gearbox easy to incorporate in numerous applications.

Features and advantages

- Reliable performance
- Compact design. Available in hygienic design
- Quiet, reliable and efficient operation
- High quality
- Can be equipped with AC, DC or servo motors, encoders and brakes
- Custom design

2 steps

3 steps

Actuators & worm gear screw jacks

Actuator in stainless steel with trapezoidal spindle or ball screw

Stainless steel actuator with motor and the stainless steel BJ-Gear brake

Actuator based on toothed belt drive made of stainless steel with motor of stainless steel

NG flange bearings

Our Blue NG Bearings are crafted from high-quality blue polyurethane (PUR), making them ideal for the food industry. These bearings feature steel-reinforced mounting holes for added durability and strength. The blue color allows for easy identification of dirt and debris, ensuring a hygienic environment. Additionally, they come with hygienic bolts, nuts, and spacers, including spacers designed for easy cleaning access.

We also offer bearing units of stainless steel.

Features and advantages

- Solid housings
- Easy assembly
- IP66 & IP67 (IP68 and IP69K on request).
- Maintenance free bearings
- USDA accepted
- Food grade acc. to reg. (EC) No. 1935/2004
- FDA food grade acc. to CFR 175.300
- NSF H1 registered grease

bj·gear

Customisation is our standard

BJ-Gear A/S
Niels Bohrs Vej 47
DK-8660 Skanderborg, Denmark
VAT No. DK 10166470

Phone +45 87 40 80 80
Email bj@bj-gear.com
Website www.bj-gear.com

Copyright © 2025 BJ-Gear A/S. All product rights reserved. All data, illustrations, photos, drawings and statements are for general information only and subject to change without notice and should not be considered as a warranty or legal obligation of any kind.

AC | 04 | 2025 | UK